GLASSWORKS PRODUCTIONS

THE MAKING OF HUAWEI SMART WATCH

STORYBOARDS

We start on a close up of pencil glass in a room filled with natural morning .light

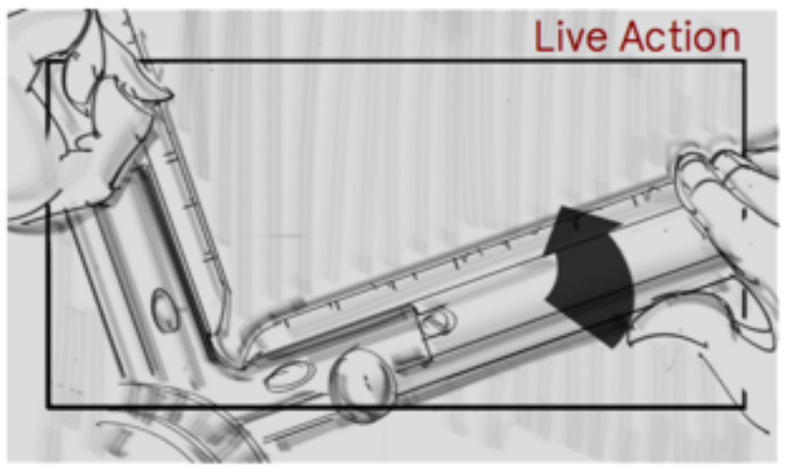

Our draftsman is getting ready to work and adjusts his ruler by rotating it into place.

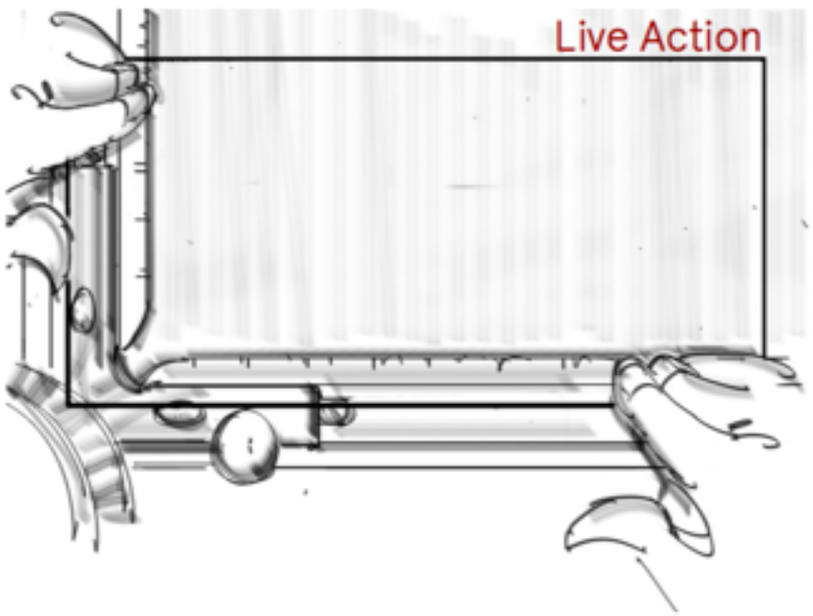

We start on a close up of pencil glass in a room filled with natural morning .light

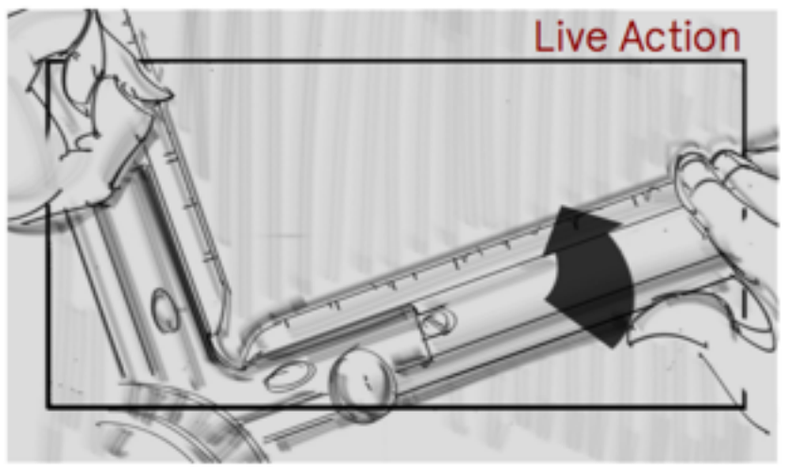

Our draftsman is getting ready to work and adjusts his ruler by rotating it into place.

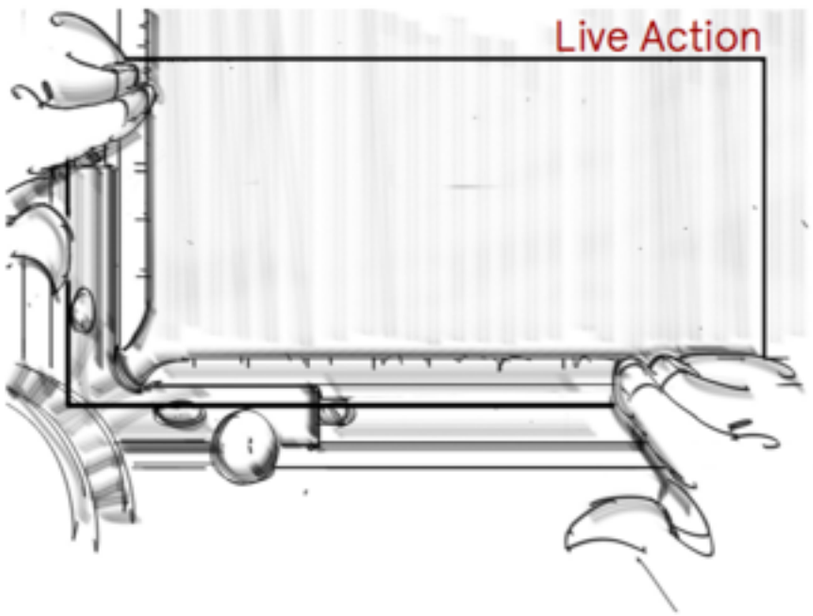

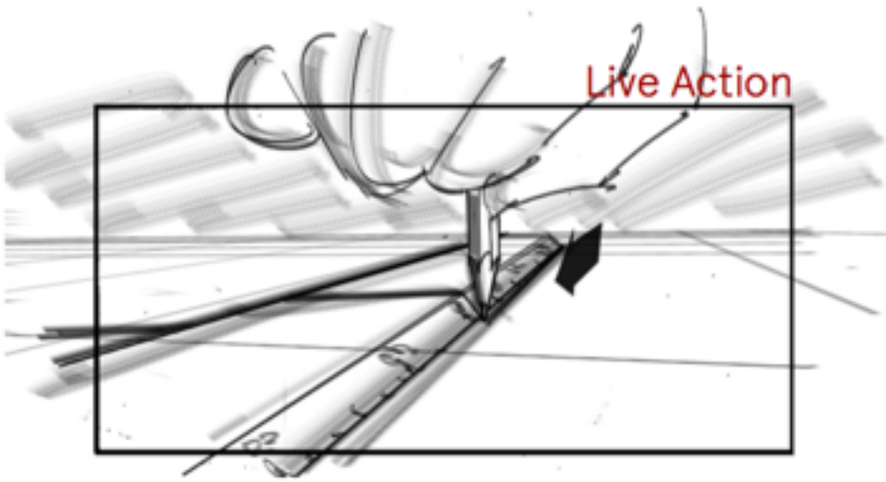

a swift stroke with a pencil sets the first line ...

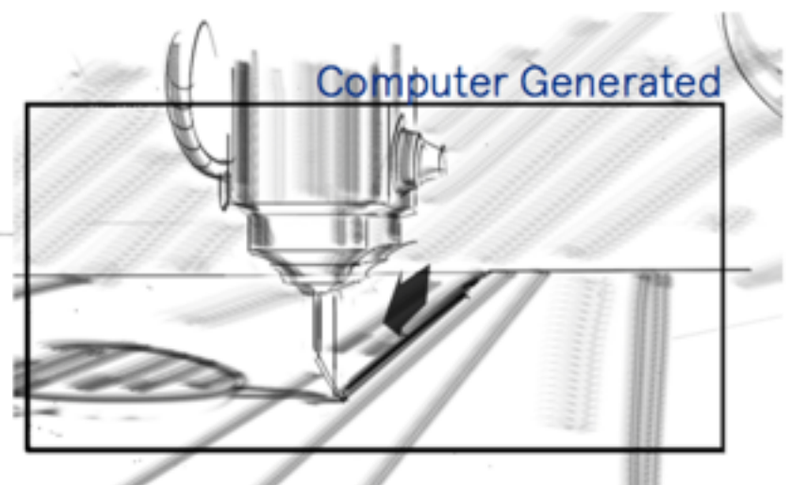

and is suddenly juxtaposed with a matching shot of blade cutting through the rich texture of a leather sheet.

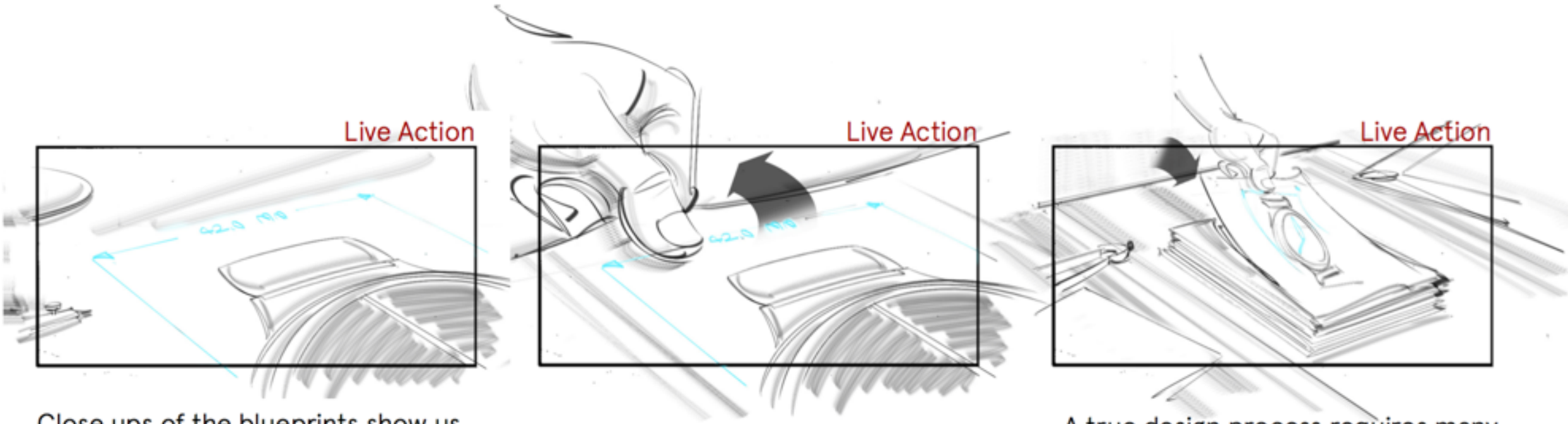

Close ups of the blueprints show us dimensions of various parts in digital overlays.

A true design process requires many drafts. We see that in the form of the big stack of paper sheets containing detail drawings.

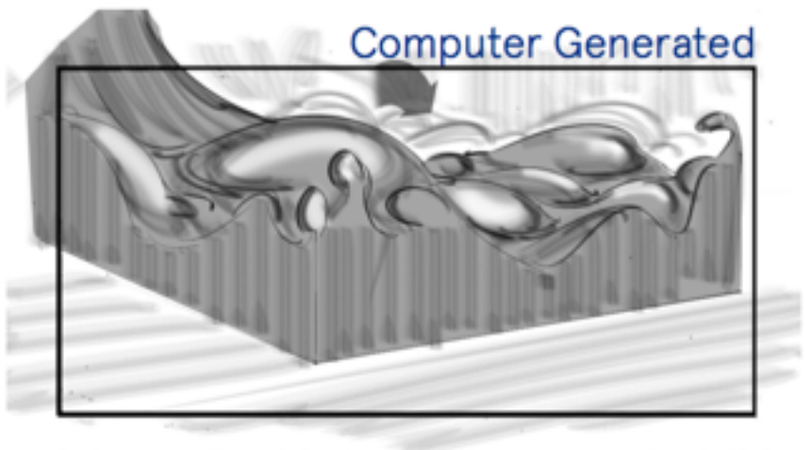

We see liquid steel filling up an invisible cubic container which matches the shape of paperstack perfectly.

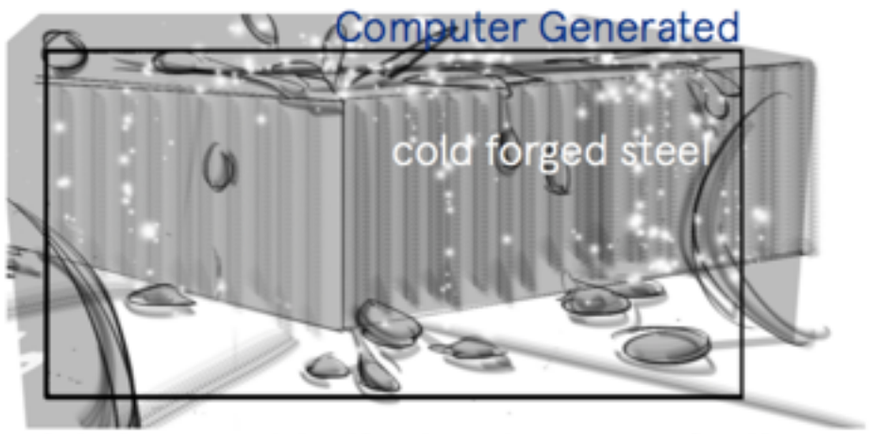

We jump cut to the ingot now perfectly formed and being cooled down with lots of damp and steam surrounding it.

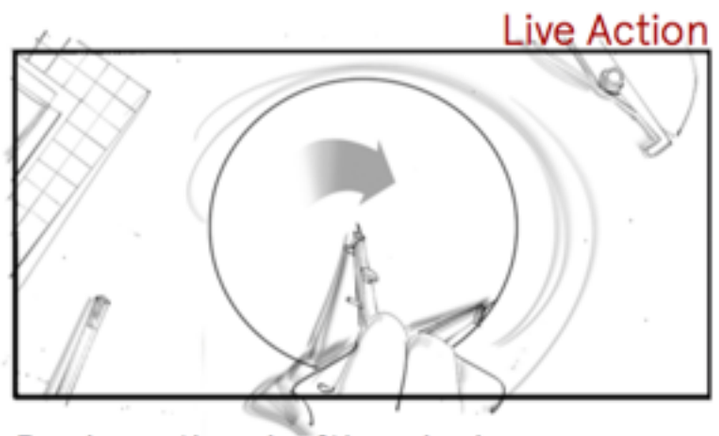

Back on the drafting desk we now see a compass draw a perfect circle.

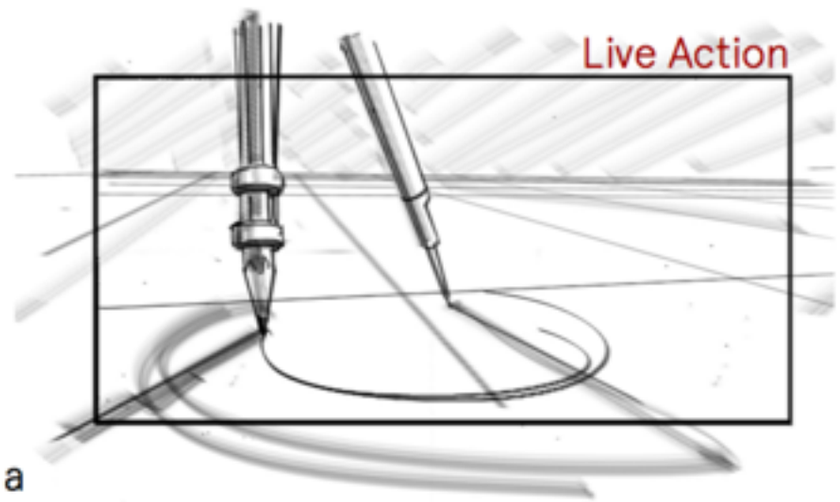

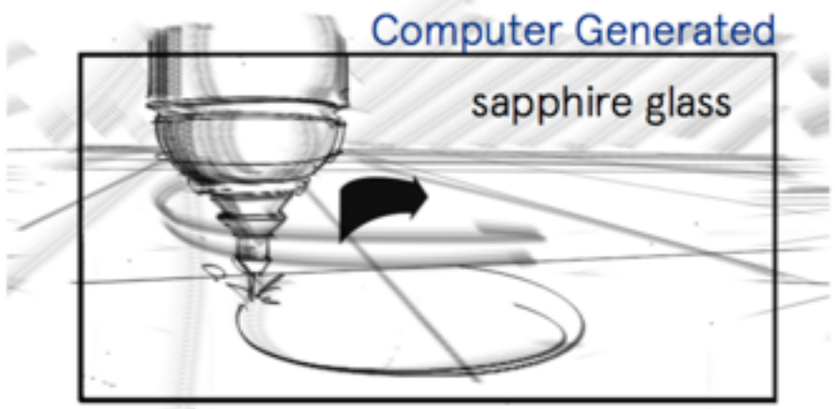

The compass is again followed by a quick match cut. This time it is a laser cutting forming the perfect circle out of sapphire glass.

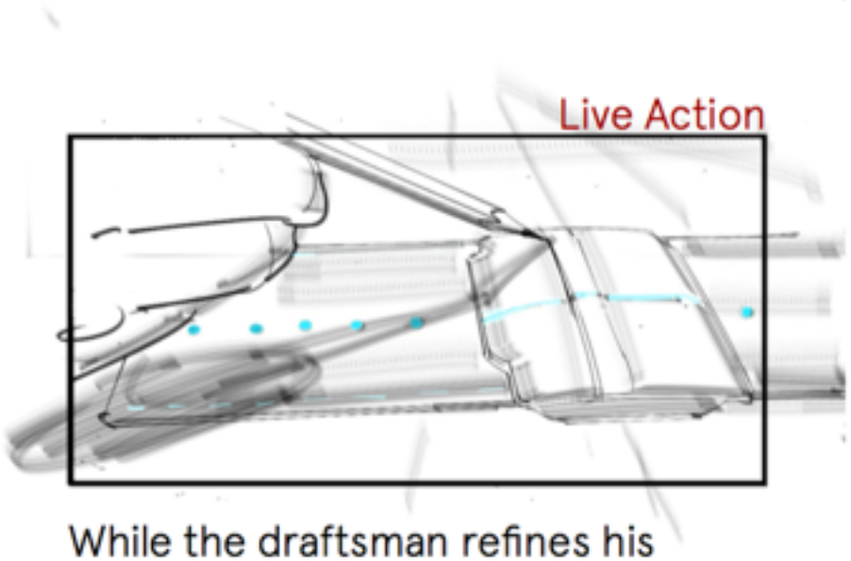

While the draftsman refines his drawings details on the leather strap are being filled in on the draft (by digital motion lines) ...

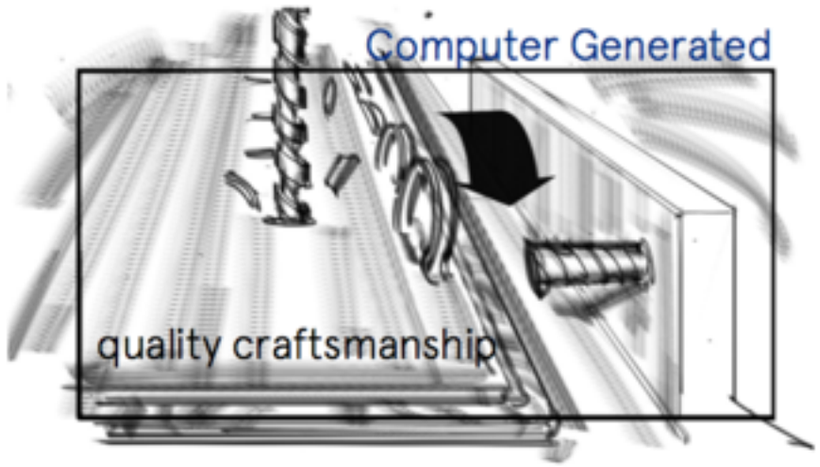

... as well as on the real leather strap.

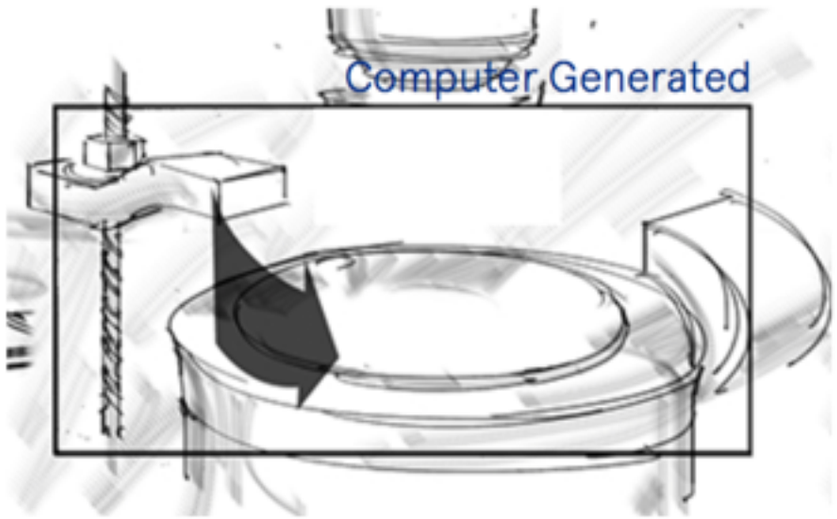

The fully formed back of the watch is being rotated into place ...

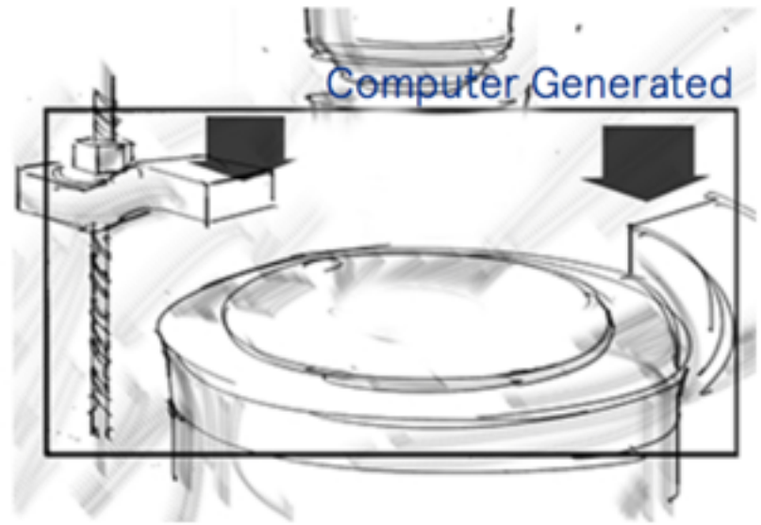

... clamped down ...

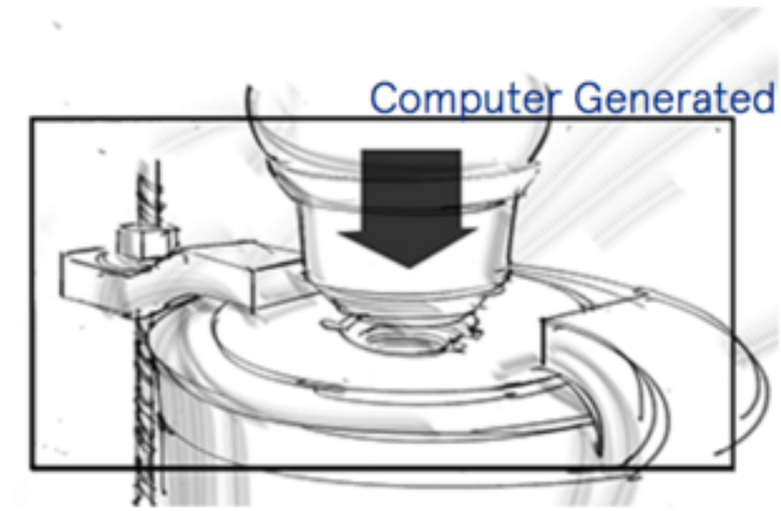

and a whole puncher comes down creating an opening.

Our draftsman sharpens his pencil ...

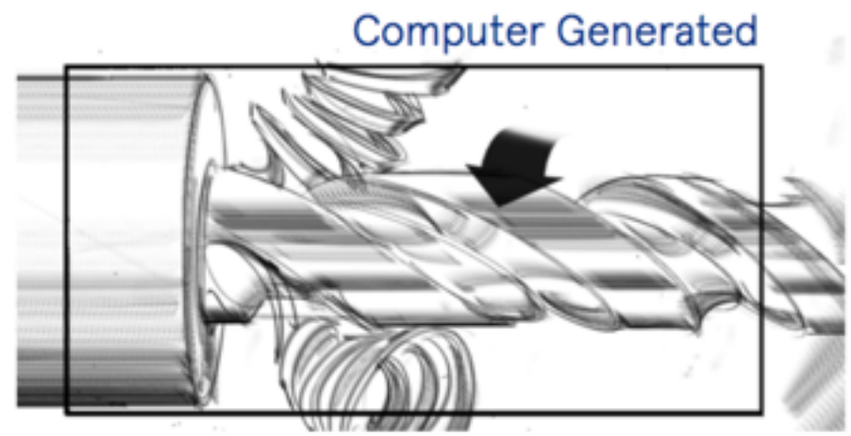

which cuts nicely to a drill creating similar shavings out of steel.

The drawing of the watch is being finished ...

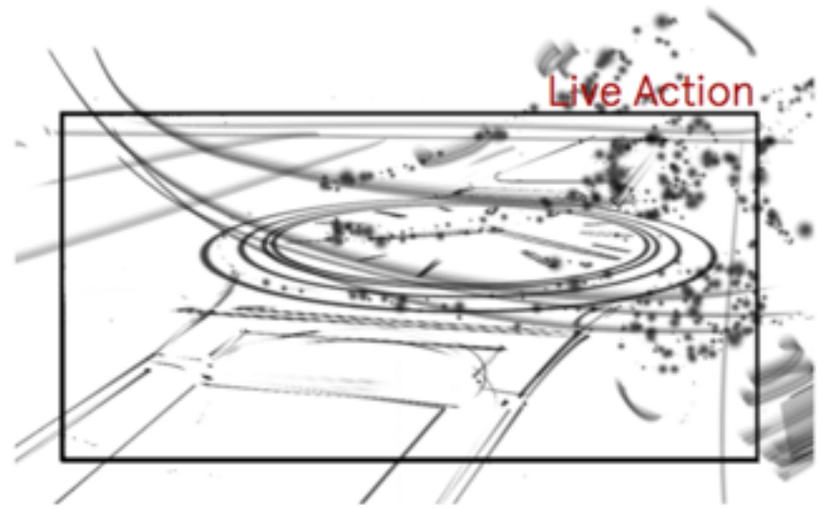

after which our designer blows away the remaining pencil graphite particles.

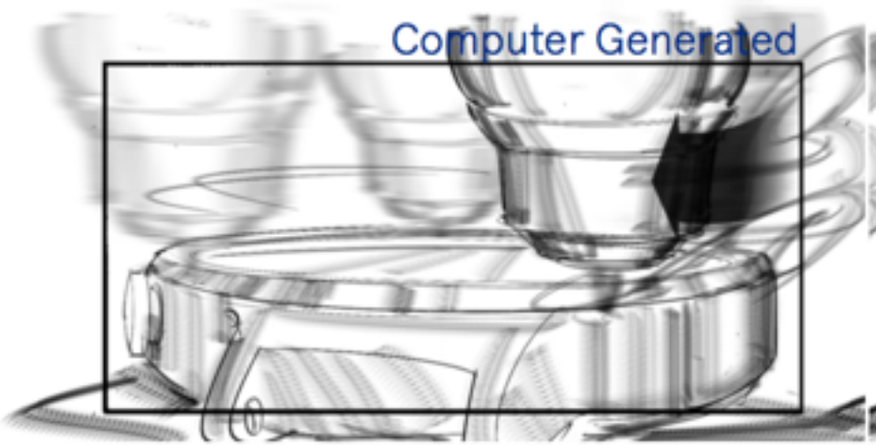

which cuts to a matching shot of a machine milling ...

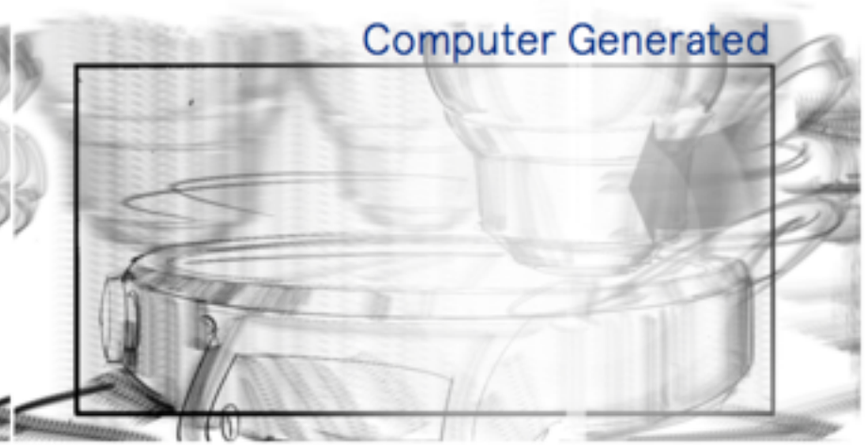

... filing and polishing the framework ...

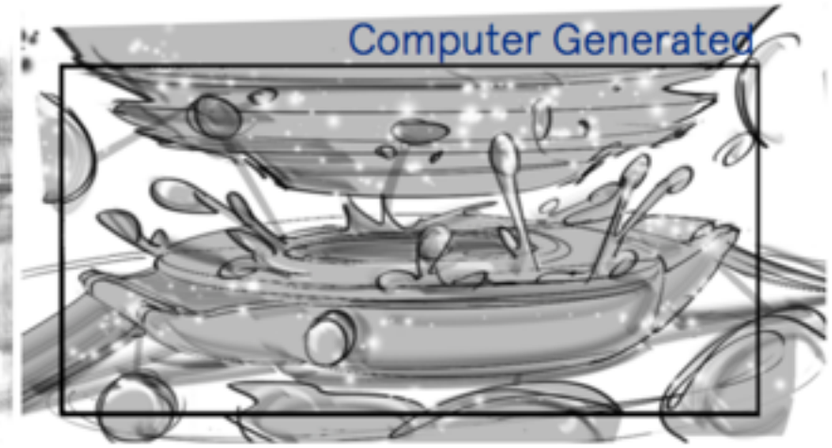

all while it is being rotated showing no holes on the pristine surface.

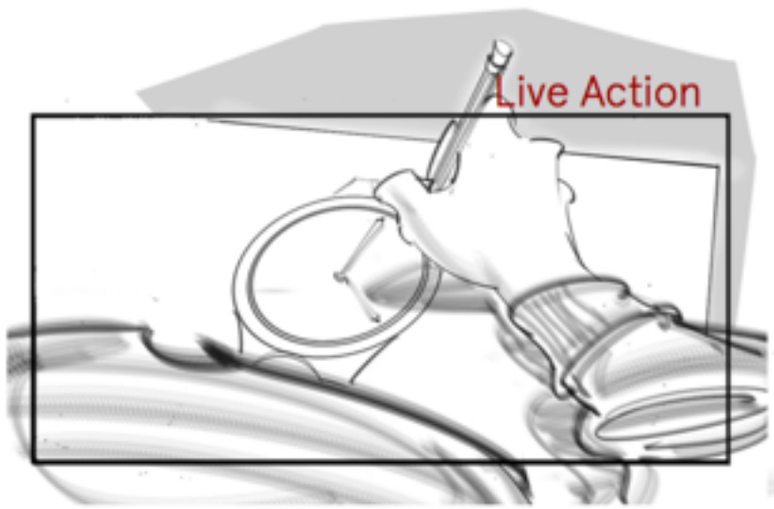

While our draftsmen is refining outlines ...

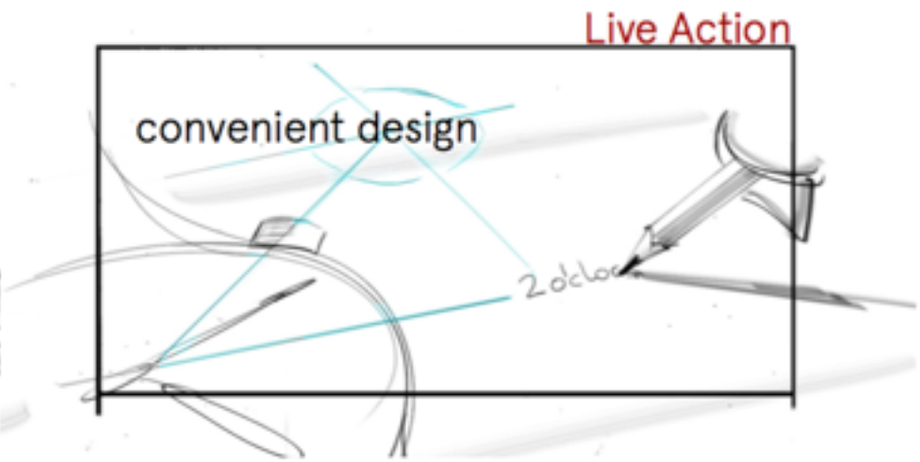

motion graphics draw on extra features like the position of the crown.

Computer Generated

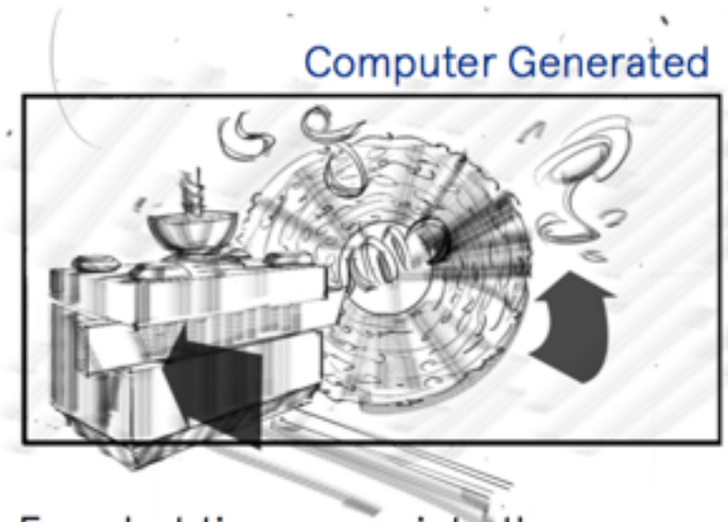

For a last time we go into the fabrication part where we see a round small part of material being filed down.

Computer Generated

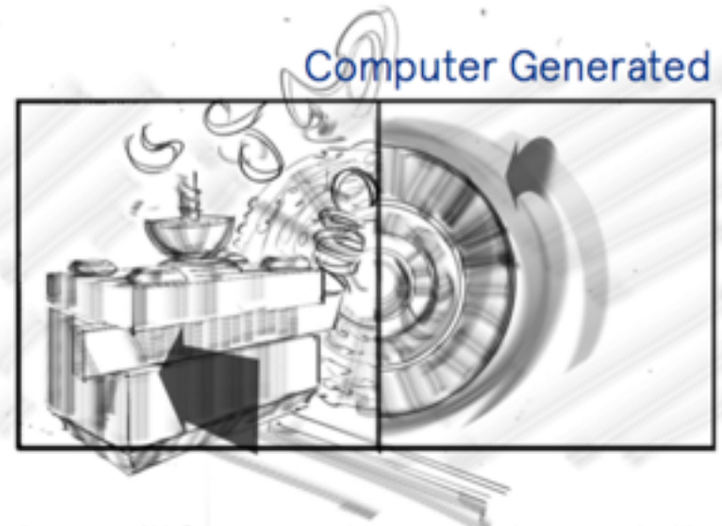

in a splitframe cut we cut to a rotating sanding/polishing machine ...

Computer Generated

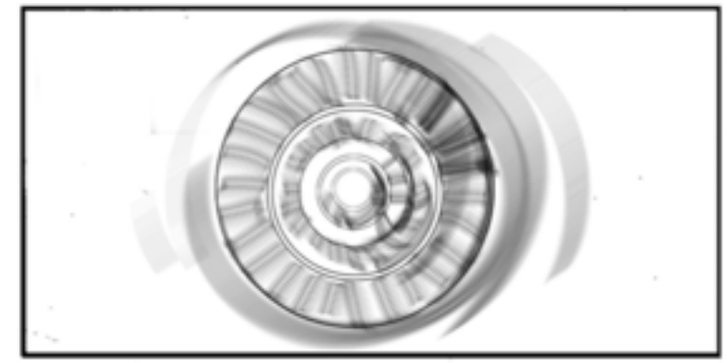

Computer Generated

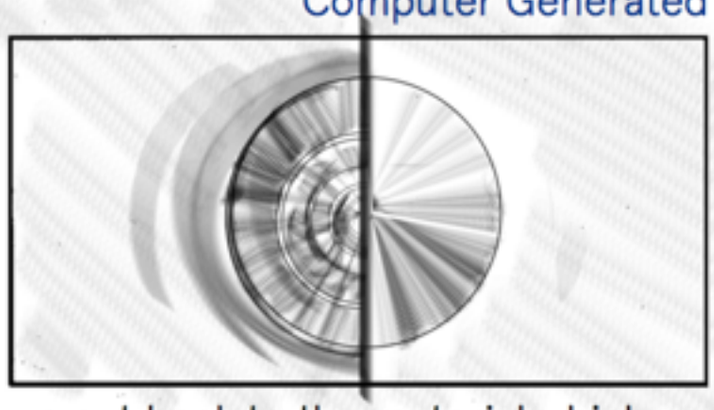

we cut back to the material which made a jump in time and is now nicely polished.

Computer Generated

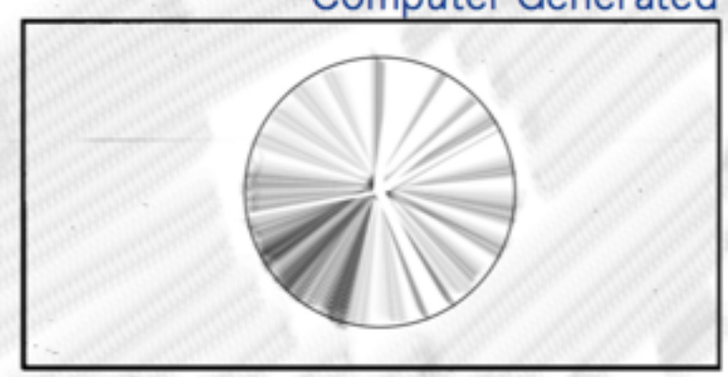

The crown piece decreases in rotation while the light is majestically wandering across the surface.

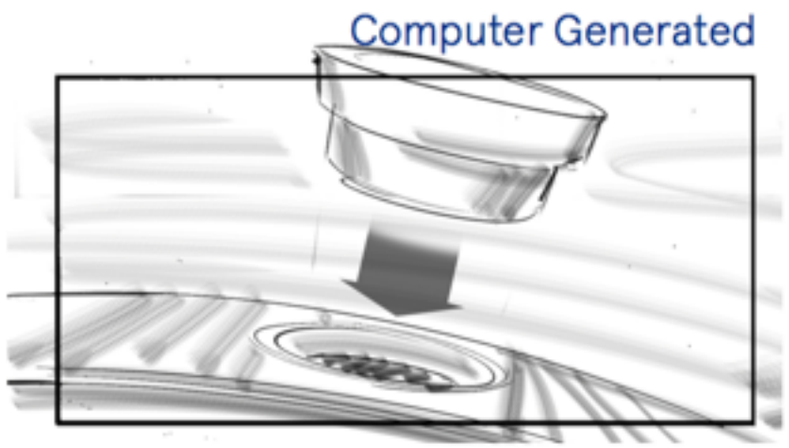

The polished crown slowly drift into it's perfect hole in the 2 o'clock position.

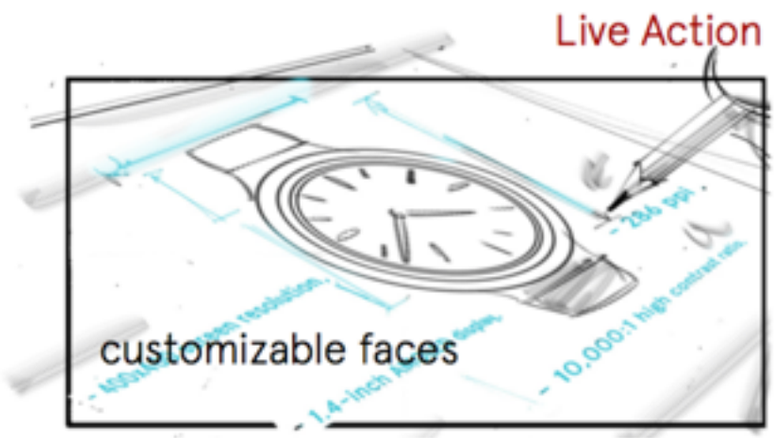

The now finished design is being supplemented by technical specifications for the display while a digital watchface on the watch flicks through several designs
(these specifications are buing drawn on digitally)

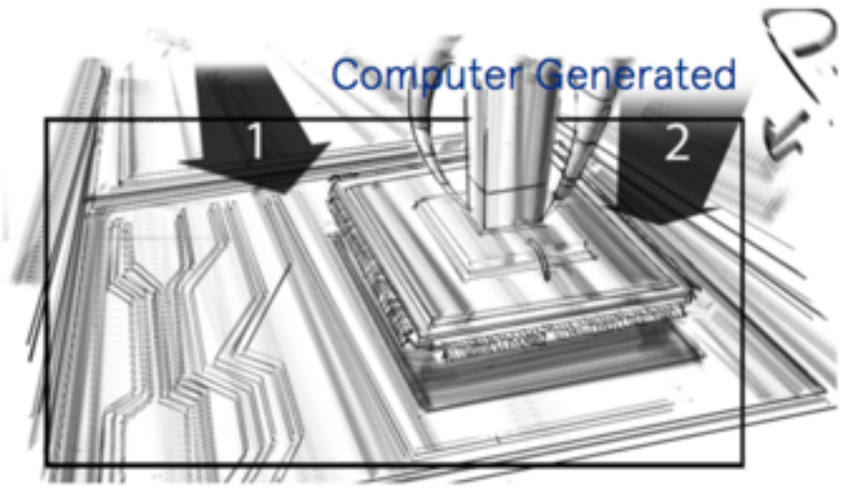

The 'smart within' part is being introduced as a computer chip that is being placed in the watches back.

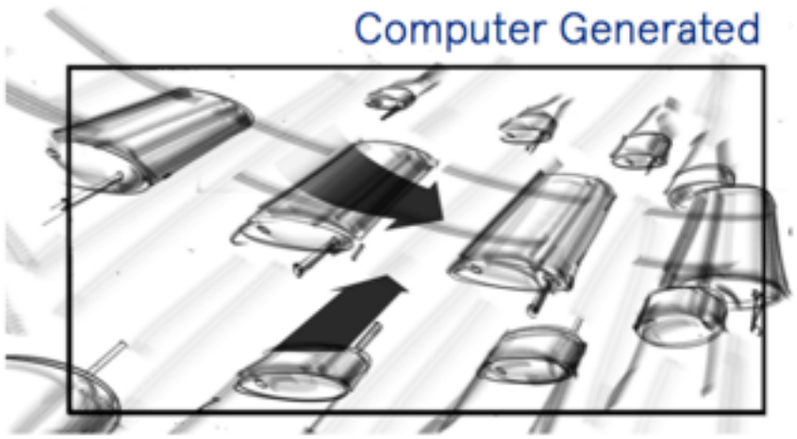

The previously built pieces of the watch slowly start floating together mid-air.

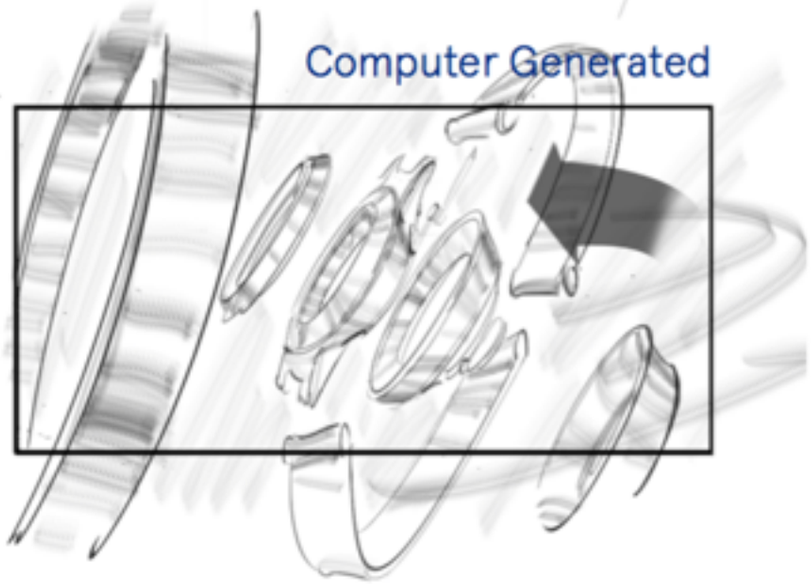

Computer Generated

The beautiful pattern of a wristband magically weaves mid-air.

Computer Generated

Time speeds up and the watch starts to form.

Computer Generated

... a wrist band clicks on while typography animates on telling us about the interchangability of the straps.

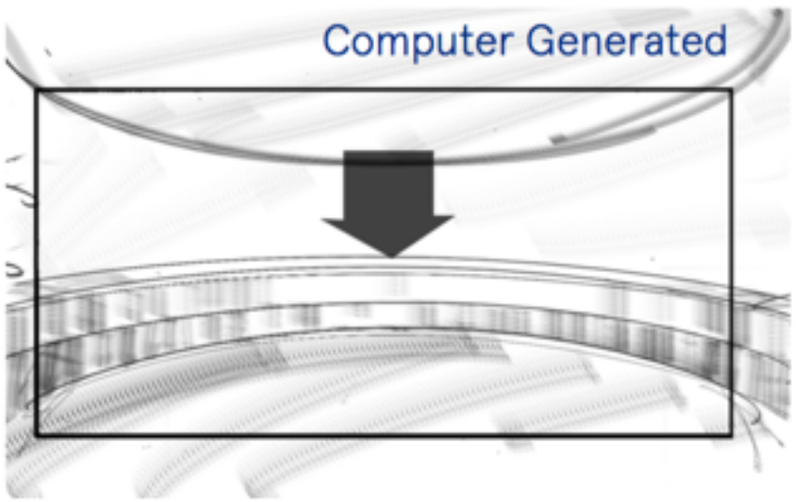

The sapphire glass with its concave shape goes through the camera ...

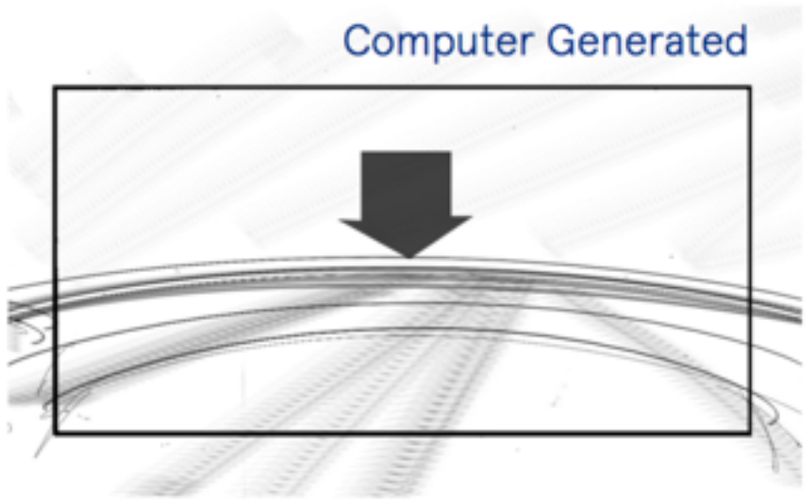

and perfectly fits into the mount.

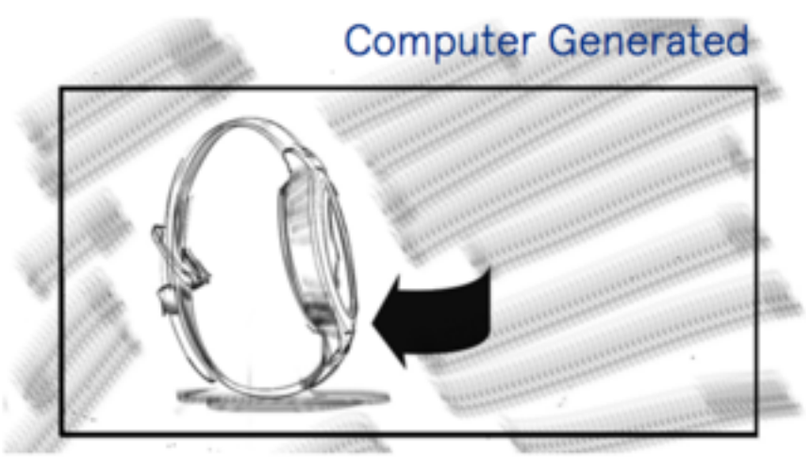

The parts form the watch, which slowly rotates into place ...

Computer Generated

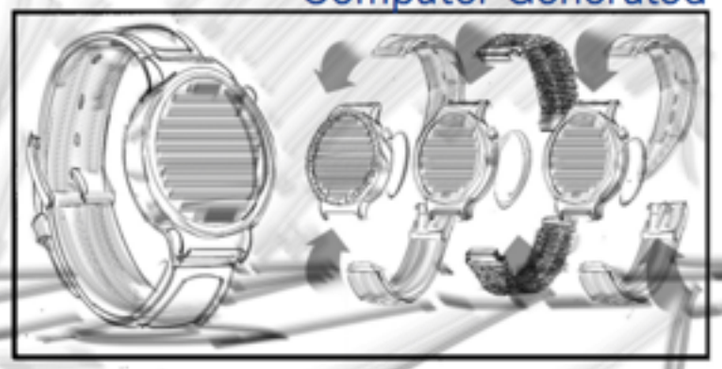

... and we see our hero watch for the first time while the other watches are still buing built in the background.

Computer Generated

Suddenly the black display of the watch comes to life, illuminating the room while starting up.

Computer Generated

the background watches, which are different models turn on as well, further illuminating the scene.

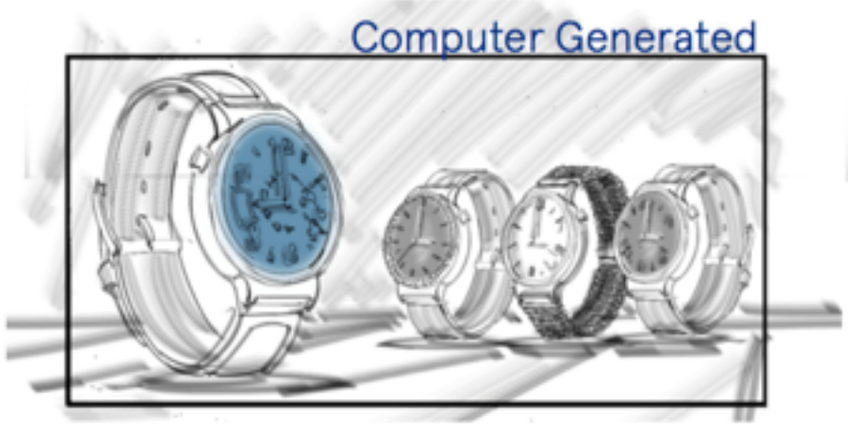

This shot finally beautifully displays all of them and a variety of different watch interfaces as well as watch designs.

ANIMATIC

FINAL FILM

GLASSHOURS

· PRODUCTIONS ·